Technical Data Sheet		Rosenberger
MTD®	RIGHT ANGLE PLUG FOR PCB	**E7S21E-40MX5-Y**

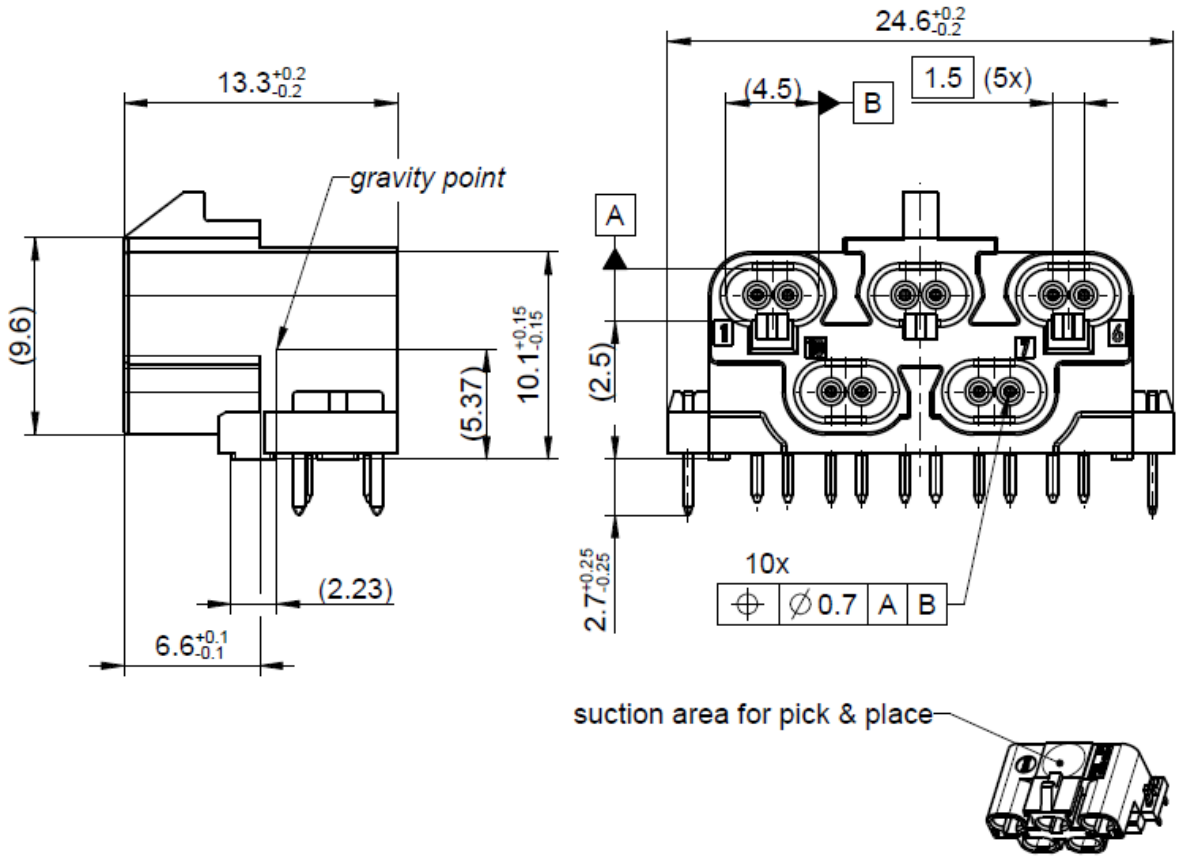

All dimensions are in mm
Y = Part number has to be accomplished by codification

Interface

According to	RN_132-05

Documents

Pinning instruction	RN_131-01
Panel piercing	MB_522
Test specification	USCar 2
Tape & reel packaging	VG352.14500

Material and plating

Connector parts	**Material**	**Plating / Colour**
Contact pin	Tin bronze	Gold, 0.15 µm (Interface) Tin, min. 2 µm (PCB)
Housing	PA6-GF33	see section “Coding”
Soldering Pin	Brass	Tin, min. 3 µm

Dieses Dokument ist urheberrechtlich geschützt • This document is protected by copyright • Rosenberger Hochfrequenztechnik GmbH & Co. KG

Rosenberger Hochfrequenztechnik GmbH & Co. KG
P.O.Box 1260 D-84526 Tittmoning Germany
www.rosenberger.de

Tel. : +49 8684 18-0
Email : info@rosenberger.de

Electrical data

Differential impedance	100 Ω ± 5% at 500 ps rise time	
Frequency range	DC to 1.0 GHz	
Return loss	$\geq 38 dB$	1 MHz to 75 MHz
	$\geq 20 - 20\log(\frac{f}{600}) dB$	75 MHz to 600 MHz
Insertion loss	$\leq 0.01 \times \sqrt{f}\, dB$	1 MHz to 600 MHz
Mode conversion loss	$\geq 55 dB$	10 MHz to 50 MHz
	$\geq 89 - 20\log(f) dB$	50 MHz to 600 MHz
PSANEXT loss	$\geq 54 dB$	1 MHz to 100 MHz
	$\geq 34.8 dB$	100 MHz to 600 MHz
PSAFEXT loss	$\geq 46.6 dB$	1 MHz to 100 MHz
	$\geq 31.1 dB$	100 MHz to 600 MHz
AFEXTDC loss	$\geq 50 dB$	10 MHz to 50 MHz
	$30 - 18.53 \cdot \log\left(\frac{f}{600}\right) dB$	50 MHz to 600 MHz
Insulation resistance	≥ 1x10³ MΩ	
Signal contact resistance	≤ 10 mΩ	
Test voltage	250 V rms	
Working voltage	100 V rms	
Power current	≤ 1.5 A DC	

Mechanical data

Mating cycles	≥ 25
Engagement force	≤ 45 N
Disengagement force	≥ 5 N
Retention force latch	≥ 110 N
Coding efficiency	≥ 80 N

Environmental data

Temperature range	-40°C to +105°C
Thermal shock	IEC 60068-2-14 Test NA
Temperature and humidity	USCar 2 – 4 5.6.2
Vibration (Random)	IEC 60068-2-64
Mechanical Shock	IEC 60068-2-27
High-Temp. Exposure	IEC 60068-2-2
Soldering profile	acc. to IEC 60068-2-58; Group 3 (250°C/30s)
RoHS	compliant

Packing

Standard	145 pcs in tape & reel
Weight	~ 2,5 g/pce

Dieses Dokument ist urheberrechtlich geschützt • This document is protected by copyright • Rosenberger Hochfrequenztechnik GmbH & Co. KG

Rosenberger Hochfrequenztechnik GmbH & Co. KG
P.O.Box 1260 D-84526 Tittmoning Germany
www.rosenberger.de

Tel. : +49 8684 18-0
Email : info@rosenberger.de

Coding

Part Number has to be accomplished by codification

Coding	Plug	Colour	RAL	Part-Number
A	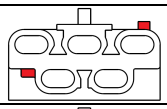	jet black	sim. 9005	E7S21E-40MX5-A
B	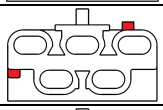	pure white	sim. 9010	E7S21E-40MX5-B
C	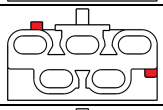	light blue	sim. 5012	E7S21E-40MX5-C
D	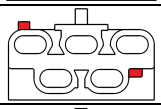	claret violet	sim. 4004	E7S21E-40MX5-D
Z	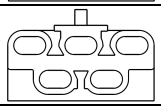	water blue	sim. 5021	E7S21E-40MX5-Z

While the information has been carefully compiled to the best of our knowledge, nothing is intended as representation or warranty on our part and no statement herein shall be construed as recommendation to infringe existing patents. In the effort to improve our products, we reserve the right to make changes judged to be necessary.

Draft	Date	Approved	Date
M. Babl	08.08.19	C. Wagner	08.08.19

Rev.	Engineering change number	Name	Date
100	19-v522	M. Babl	08.08.19

Rosenberger Hochfrequenztechnik GmbH & Co. KG
P.O.Box 1260 D-84526 Tittmoning Germany
www.rosenberger.de

Tel. : +49 8684 18-0
Email : info@rosenberger.de

Dieses Dokument ist urheberrechtlich geschützt ● This document is protected by copyright ● Rosenberger Hochfrequenztechnik GmbH & Co. KG